Colar de Tomada Simples

Material: PP
Pressão de trabalho: vide tabela

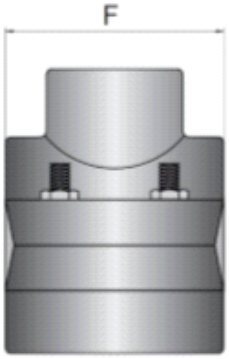

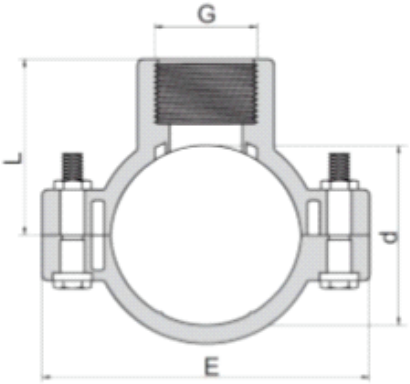

Rosca Fêmea ISO 7 com reforço externo em aço inox
parafusos galvanizados – inox sob consulta

Código	d x G	L	E	F	Nº PARAFUSOS	PARAFUSO	PN	Peso/pc (kg)
CCTS02001216FR	20 x ½"	32	62	38	2	M6 X 30	16	
CCTS02501216FR	25 x ½"	33	72	48	2	M6 X 35	16	
CCTS02503416FR	25 x ¾"	34	72	48	2	M6 X 35	16	
CCTS03201216FR	32 x ½"	39	87	52	2	M8 X 45	16	
CCTS03203416FR	32 ⊂ù "	40	87	52	2	M8 X 45	16	
CCTS03210016FR	32 ⊂1"	47	88	56	2	M8 X 45	16	
CCTS04001216FR	40 x ½"	42	88	56	2	M8 X 45	16	
CCTS04003416FR	40 ⊂ù "	42	88	56	2	M8 X 45	16	
CCTS04010016FR	40 x 1"	47	88	56	2	M8 X 45	16	
CCTS05001216FR	50 x ½"	46	95	57	2	M8 X 45	16	
CCTS05003416FR	50 ⊂ù "	48	95	57	2	M8 X 45	16	
CCTS05010016FR	50 ⊂1"	51	95	57	2	M8 X 45	16	
CCTS06301216FR	63 x ½"	53	108	72	4	M8 X 45	16	
CCTS06303416FR	63 ⊂ù "	55	108	72	4	M8 X 45	16	
CCTS06310016FR	63 ⊂1"	58	108	72	4	M8 X 45	16	
CCTS06311416FR	63 x 1¼"	60	108	72	4	M8 X 45	16	
CCTS06311216FR	63 x 1½"	60	108	72	4	M8 X 45	10	
CCTS07501210FR	75 x ½"	60	120	90	4	M8 X 60	16	
CCTS07503410FR	75 ⊂ù "	61	120	90	4	M8 X 60	16	
CCTS07510010FR	75 x 1"	65	120	90	4	M8 X 60	16	
CCTS07511410FR	75 x 1¼"	67	120	90	4	M8 X 60	16	
CCTS07511210FR	75 x 1½"	67	120	90	4	M8 X 60	10	
CCTS07520010FR	75 x 2"	70	120	90	4	M8 X 60	10	
CCTS09001210FR	90 x ½"	68	135	90	4	M8 X 60	16	
CCTS09003410FR	90 ⊂ù "	69	135	90	4	M8 X 60	16	
CCTS09010010FR	90 ⊂1"	73	135	90	4	M8 X 60	16	
CCTS09011410FR	90 x 1¼"	75	135	90	4	M8 X 60	16	
CCTS09011210FR	90 x 1½"	75	135	90	4	M8 X 60	10	
CCTS09020010FR	90 ⊂2"	78	135	90	4	M8 X 60	10	

Colar de Tomada Simples

Material: PP
Pressão de trabalho: vide tabela

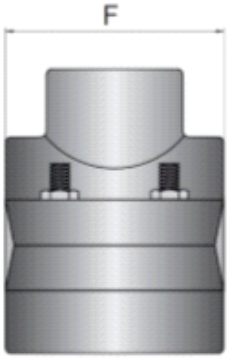

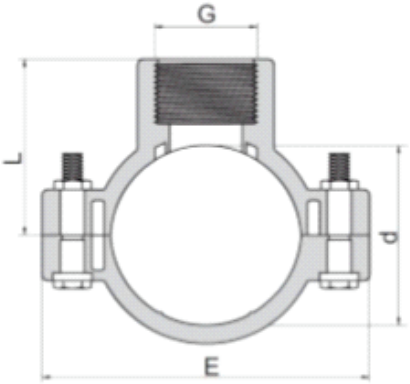

Rosca Fêmea ISO 7 com reforço externo em aço inox
parafusos galvanizados – inox sob consulta

Código	*d x G*	*L*	*E*	*F*	*Nº PARAFUSOS*	*PARAFUSO*	*PN*	*Peso/pc (kg)*
CCTS11001210FR	110 x ½"	78	155	105	4	M8 X 60	16	
CCTS11003410FR	110 ⊂ù "	79	155	105	4	M8 X 60	16	
CCTS11010010FR	110 ⊂ 1"	83	155	105	4	M8 X 60	16	
CCTS11011410FR	110 x 1¼"	85	155	105	4	M8 X 60	16	
CCTS11011210FR	110 x 1½"	85	155	105	4	M8 X 60	10	
CCTS11020010FR	110 x 2"	88	155	105	4	M8 X 60	10	
CCTS11021210FR	110 x 2½"	94	155	105	4	M8 X 60	6	
CCTS11030010FR	110 x 3"	103	155	124	4	M8 X 70	6	
CCTS12503410FR	125 ⊂ù "	90	180	130	4	M8 X 70	10	
CCTS12510010FR	125 ⊂ 1"	92	180	130	4	M8 X 70	10	
CCTS12511410FR	125 x 1¼"	95	180	130	4	M8 X 70	10	
CCTS12511210FR	125 x 1½"	95	180	130	4	M8 X 70	10	
CCTS12520010FR	125 x 2"	98	180	130	4	M8 X 70	10	
CCTS12521210FR	125 x 2½"	111	180	130	4	M8 X 70	6	
CCTS14010010FR	140 ⊂ 1"	100	180	130	6	M8 X 70	10	
CCTS14011410FR	140 x 1¼"	101	195	130	6	M8 X 70	10	
CCTS14011210FR	140 x 1½"	101	195	130	6	M8 X 70	10	
CCTS14020010FR	140 x 2"	111	195	130	6	M8 X 70	10	
CCTS14021210FR	140 x 2½"	110	195	130	6	M8 X 70	6	
CCTS14030010FR	140 x 3"	121	195	130	6	M8 X 70	6	
CCTS16010010FR	160 ⊂ 1"	111	219	135	6	M8 X 70	10	
CCTS16011410FR	160 x 1¼"	113	219	135	6	M8 X 70	10	
CCTS16011210FR	160 x 1½"	113	219	135	6	M8 X 70	10	
CCTS16020010FR	160 x 2"	116	219	135	6	M8 X 70	10	
CCTS16021210FR	160 x 1½"	122	219	135	6	M8 X 70	6	
CCTS16030010FR	160 x 3"	133	219	135	6	M8 X 70	6	

Colar de Tomada Simples

Material: PP
Pressão de trabalho: vide tabela

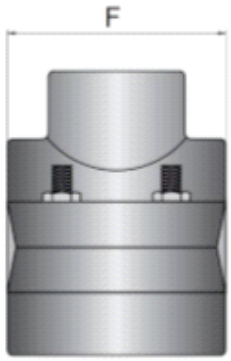

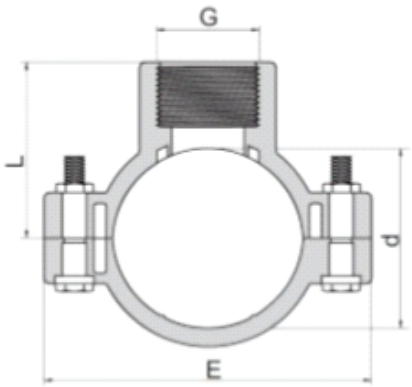

Rosca Fêmea ISO 7 com reforço externo em aço inox
parafusos galvanizados – inox sob consulta

Código	d x G	L	E	F	Nº PARAFUSOS	PARAFUSO	PN	Peso/pc (kg)
CCTS20010010FR	200 x 1″	132	273	168	6	M10 X 80	6	
CCTS20011410FR	200 x 1¼″	135	273	168	6	M10 X 80	6	
CCTS20011210FR	200 x 1½″	135	273	168	6	M10 X 80	6	
CCTS20020010FR	200 x 2″	138	273	168	6	M10 X 80	6	
CCTS20021210FR	200 x 2½″	143	273	168	6	M10 X 80	6	
CCTS20030010FR	200 x 3″	153	273	168	6	M10 X 80	6	
CCTS20040010FR	200 x 4″	153	273	168	6	M10 X 80	6	
CCTS22510010FR	225 x 1″	144	299	180	6	M10 X 80	6	
CCTS22511410FR	225 x 1¼″	148	299	180	6	M10 X 80	6	
CCTS22511210FR	225 x 1 ½″	148	299	180	6	M10 X 80	6	
CCTS22520010FR	225 x 2″	151	299	180	6	M10 X 80	6	
CCTS22521210FR	225 x 2½″	156	299	180	6	M10 X 80	6	
CCTS22530010FR	225 x 3″	166	299	180	6	M10 X 80	6	
CCTS22540010FR	225 x 4″	166	299	190	6	M10 X 80	6	
CCTS25010010FR	250 x 1″	157	324	190	6	M10 X 80	6	
CCTS25011410FR	250 x 1¼″	160	324	190	6	M10 X 80	6	
CCTS25011210FR	250 x 1½″	160	324	190	6	M10 X 80	6	
CCTS25020010FR	250 x 2″	163	324	190	6	M10 X 80	6	
CCTS25021210FR	250 x 2½″	178	324	190	6	M10 X 80	6	
CCTS25030010FR	250 x 3″	178	324	190	6	M10 X 80	6	
CCTS25040010FR	250 x 4″	178	324	190	6	M10 X 80	6	
CCTS31510010FR	315 x 1″	189	395	198	6	M10 X 80	6	
CCTS31511410FR	315 x 1¼″	193	395	198	6	M10 X 80	6	
CCTS31511210FR	315 x 1½″	193	395	198	6	M10 X 80	6	
CCTS31520010FR	315 x 2″	196	395	198	6	M10 X 80	6	
CCTS31521210FR	315 x 2½″	201	395	198	6	M10 X 80	6	
CCTS31530010FR	315 x 3″	211	395	198	6	M10 X 80	6	
CCTS31540010FR	315 x 4″	211	395	198	6	M10 X 80	6	

Colar de Tomada Duplo

Material: PP
Pressão de trabalho: vide tabela

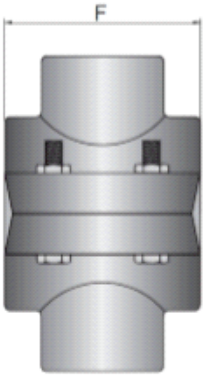

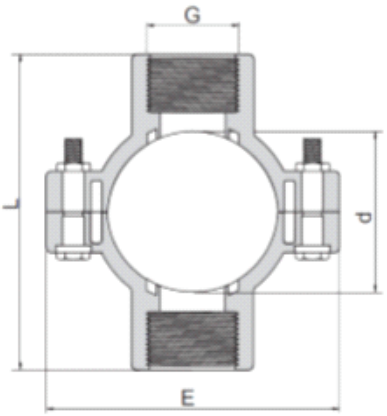

Rosca Fêmea ISO 7 com reforço externo em aço inox
parafusos galvanizados – inox sob consulta

Código	*d x G*	*L*	*E*	*F*	*Nº DE PARAFUSOS*	*PARAFUSO*	*PN*	*Peso/pc (kg)*
CCTD02001216FR	20 x ½" x ½"	64	62	38	2	M6 X 30	10	
CCTD02501216FR	25 x ½" x ½"	66	72	48	2	M6 X 35	10	
CCTD02503416FR	25 x ¾" x ¾"	68	72	48	2	M6 X 35	10	
CCTD03201216FR	32 x ½" x ½"	78	87	52	2	M8 X 45	10	
CCTD03203416FR	32 ⊂ù " x ù	80	87	52	2	M8 X 45	10	
CCTD03210016FR	32 ⊂1" x 1"	94	88	56	2	M8 X 45	10	
CCTD04001216FR	40 x ½" x ½"	84	88	56	2	M8 X 45	10	
CCTD04003416FR	40 ⊂ù " x ù	84	88	56	2	M8 X 45	10	
CCTD04010016FR	40 x 1" x 1"	94	88	56	2	M8 X 45	10	
CCTD05001216FR	50 x ½" x ½"	92	95	57	2	M8 X 45	10	
CCTD05003416FR	50 ⊂ù " x ù	96	95	57	2	M8 X 45	10	
CCTD05010016FR	50 ⊂1" x 1"	102	95	57	2	M8 X 45	10	
CCTD06301216FR	63 x ½" x ½"	106	108	72	4	M8 X 45	10	
CCTD06303416FR	63 ⊂ù " x ù	110	108	72	4	M8 X 45	10	
CCTD06310016FR	63 ⊂1" x 1"	116	108	72	4	M8 X 45	10	
CCTD06311416FR	63 x 1¼" x 1¼"	120	108	72	4	M8 X 45	6	
CCTD06311216FR	63 x 1½" x 1½"	120	108	72	4	M8 X 45	6	
CCTD07501210FR	75 x ½" x ½"	120	120	90	4	M8 X 60	10	
CCTD07503410FR	75 ⊂ù " x ù	122	120	90	4	M8 X 60	10	
CCTD07510010FR	75 x 1" x 1"	130	120	90	4	M8 X 60	10	
CCTD07511410FR	75 x 1¼"x 1¼"	134	120	90	4	M8 X 60	6	
CCTD07511210FR	75 x 1½" x 1½"	134	120	90	4	M8 X 60	6	
CCTD07520010FR	75 x 2" x 2"	140	120	90	4	M8 X 60	6	
CCTD09001210FR	90 x ½" x ½"	136	135	90	4	M8 X 60	10	
CCTD09003410FR	90 ⊂ù "x ù	138	1235	90	4	M8 X 60	10	
CCTD09010010FR	90 ⊂1" x 1"	146	135	90	4	M8 X 60	10	

Colar de Tomada Duplo

Material: PP
Pressão de trabalho: vide tabela

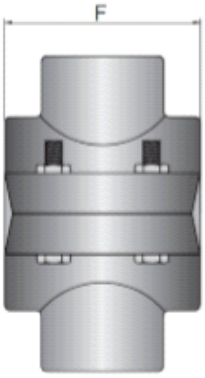

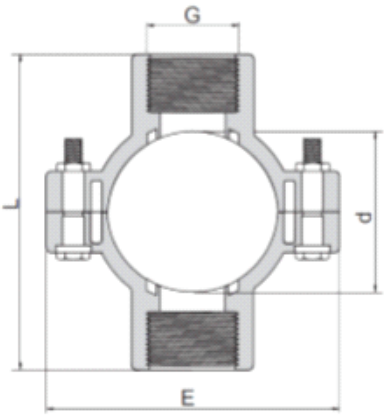

Rosca Fêmea ISO 7 com reforço externo em aço inox
parafusos galvanizados – inox sob consulta

Código	d x G	L	E	F	Nº DE PARAFUSOS	PARAFUSO	PN	Peso/pc (kg)
CCTD09011410FR	90 x 1¼" x 1¼"	150	135	90	4	M8 X 60	6	
CCTD09011210FR	90 x 1½" x 1½"	150	135	90	4	M8 X 60	6	
CCTD09020010FR	90 ⊂2" x 2	156	135	90	4	M8 X 60	6	
CCTD11001210FR	110 x ½" x ½"	156	155	105	4	M8 X 60	10	
CCTD11003410FR	110 ⊂ù " x ù	158	155	105	4	M8 X 60	10	
CCTD11010010FR	110 ⊂1" x 1"	166	155	105	4	M8 X 60	10	
CCTD11011410FR	110 x 1¼" x 1¼"	170	155	105	4	M8 X 60	6	
CCTD11011210FR	110 x 1½" x 1½"	170	155	105	4	M8 X 60	6	
CCTD11020010FR	110 x 2" x 2"	176	155	105	4	M8 X 60	6	
CCTD11021210FR	110 x 2½" x 2½"	188	155	105	4	M8 X 60	4	
CCTD11030010FR	110 x 3" x 3"	206	155	124	4	M8 X 70	4	
CCTD12503410FR	125 ⊂ù "							
CCTD12510010FR	125 ⊂1"							
CCTD12511410FR	125 x 1¼"							
CCTD12511210FR	125 x 1½"							
CCTD12520010FR	125 x 2"							
CCTD12521210FR	125 x 2½"							
CCTD14010010FR	140 ⊂1"							
CCTD14011410FR	140 x 1¼"							
CCTD14011210FR	140 x 1½"							
CCTD14020010FR	140 x 2"							
CCTD14021210FR	140 x 1½"							
CCTD14030010FR	140 x 3"							
CCTD16010010FR	160 ⊂1"	222	219	135	6	M8 X 70	10	
CCTD16011410FR	160 x 1¼"	226	219	135	6	M8 X 70	10	
CCTD16011210FR	160 x 1½"	226	219	135	6	M8 X 70	10	
CCTD16020010FR	160 x 2"	232	219	135	6	M8 X 70	10	
CCTD16021210FR	160 x 1½"	244	219	135	6	M8 X 70	6	
CCTD16030010FR	160 x 3"	266	219	135	6	M8 X 70	6	

Colar de Tomada Duplo

Material: PP
Pressão de trabalho: vide tabela

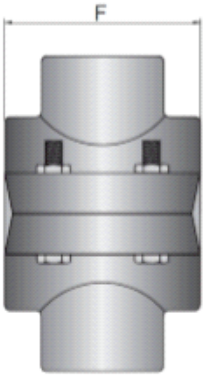

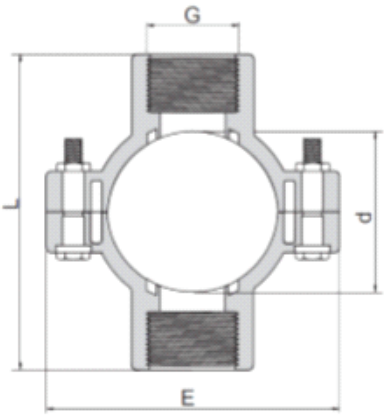

Rosca Fêmea ISO 7 com reforço externo em aço inox
parafusos galvanizados – inox sob consulta

Código	d x G	L	E	F	Nº DE PARAFUSOS	PARAFUSO	PN	Peso/pc (kg)
CCTD20010010FR	200 x 1″	264	273	168	6	M10 X 80	10	
CCTD20011410FR	200 x 1¼″	270	273	168	6	M10 X 80	10	
CCTD20011210FR	200 x 1½″	270	273	168	6	M10 X 80	10	
CCTD20020010FR	200 x 2″	276	273	168	6	M10 X 80	10	
CCTD20021210FR	200 x 2½″	286	273	168	6	M10 X 80	6	
CCTD20030010FR	200 x 3″	306	273	168	6	M10 X 80	6	
CCTD20040010FR	200 x 4″	306	273	168	6	M10 X 80	6	
CCTD22510010FR	225 x 1″	288	299	180	6	M10 X 80	6	
CCTD22511410FR	225 x 1¼″	296	299	180	6	M10 X 80	6	
CCTD22511210FR	225 x 1 ½″	296	299	180	6	M10 X 80	6	
CCTD22520010FR	225 x 2″	302	299	180	6	M10 X 80	6	
CCTD22521210FR	225 x 2½″	312	299	180	6	M10 X 80	6	
CCTD22530010FR	225 x 3″	332	299	180	6	M10 X 80	6	
CCTD22540010FR	225 x 4″	332	299	190	6	M10 X 80	6	
CCTD25010010FR	250 x 1″	314	324	190	6	M10 X 80	6	
CCTD25011410FR	250 x 1¼″	320	324	190	6	M10 X 80	6	
CCTD25011210FR	250 x 1½″	320	324	190	6	M10 X 80	6	
CCTD25020010FR	250 x 2″	326	324	190	6	M10 X 80	6	
CCTD25021210FR	250 x 2½″	356	324	190	6	M10 X 80	6	
CCTD25030010FR	250 x 3″	356	324	190	6	M10 X 80	6	
CCTD25040010FR	250 x 4″	356	324	190	6	M10 X 80	6	
CCTD31510010FR	315 x 1″	378	395	198	6	M10 X 80	6	
CCTD31511410FR	315 x 1¼″	386	395	198	6	M10 X 80	6	
CCTD31511210FR	315 x 1½″	386	395	198	6	M10 X 80	6	
CCTD31520010FR	315 x 2″	392	395	198	6	M10 X 80	6	
CCTD31521210FR	315 x 2½″	402	395	198	6	M10 X 80	6	
CCTD31530010FR	315 x 3″	422	395	198	6	M10 X 80	6	
CCTD31540010FR	315 x 4″	422	395	198	6	M10 X 80	6	

Colar de Tomada Simples

Material: PP
Pressão de trabalho: vide tabela

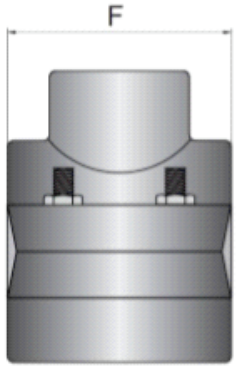

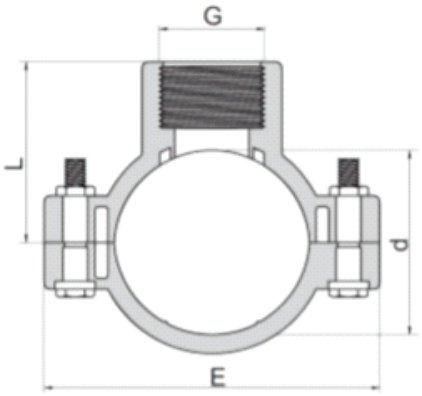

Rosca Fêmea ISO 7
parafusos galvanizados – inox sob consulta

Código	d x G	L	E	F	Nº PARAFUSOS	PARAFUSO	PN	Peso/pc (kg)
CCTS02001216F	20 x ½"	32	62	38	2	M6 X 30	10	
CCTS02501216F	25 x ½"	33	72	48	2	M6 X 35	16	
CCTS02503416F	25 x ¾"	34	72	48	2	M6 X 35	16	
CCTS03201216F	32 x ½"	39	87	52	2	M8 X 45	16	
CCTS03203416F	32 ⊂ù "	40	87	52	2	M8 X 45	16	
CCTS03210016F	32 ⊂1"	47	88	56	2	M8 X 45	16	
CCTS04001216F	40 x ½"	42	88	56	2	M8 X 45	16	
CCTS04003416F	40 ⊂ù "	42	88	56	2	M8 X 45	16	
CCTS04010016F	40 x 1"	47	88	56	2	M8 X 45	16	
CCTS05001216F	50 x ½"	46	95	57	2	M8 X 45	16	
CCTS05003416F	50 ⊂ù "	48	95	57	2	M8 X 45	16	
CCTS05010016F	50 ⊂1"	51	95	57	2	M8 X 45	16	
CCTS06301216F	63 x ½"	53	108	72	4	M8 X 45	16	
CCTS06303416F	63 ⊂ù "	55	108	72	4	M8 X 45	16	
CCTS06310016F	63 ⊂1"	58	108	72	4	M8 X 45	16	
CCTS06311416F	63 x 1¼"	60	108	72	4	M8 X 45	16	
CCTS06311216F	63 x 1½"	60	108	72	4	M8 X 45	16	
CCTS07501210F	75 x ½"	60	120	90	4	M8 X 60	16	
CCTS07503410F	75 ⊂ù "	61	120	90	4	M8 X 60	16	
CCTS07510010F	75 x 1"	65	120	90	4	M8 X 60	16	
CCTS07511410F	75 x 1¼"	67	120	90	4	M8 X 60	10	
CCTS07511210F	75 x 1½"	67	120	90	4	M8 X 60	10	
CCTS07520010F	75 x 2"	70	120	90	4	M8 X 60	6	
CCTS09001210F	90 x ½"	68	135	90	4	M8 X 60	16	
CCTS09003410F	90 ⊂ù "	69	135	90	4	M8 X 60	16	
CCTS09010010F	90 ⊂1"	73	135	90	4	M8 X 60	16	
CCTS09011410F	90 x 1¼"	75	135	90	4	M8 X 60	10	
CCTS09011210F	90 x 1½"	75	135	90	4	M8 X 60	10	
CCTS09020010F	90 ⊂2"	78	135	90	4	M8 X 60	6	

Colar de Tomada Simples

Material: PP
Pressão de trabalho: vide tabela

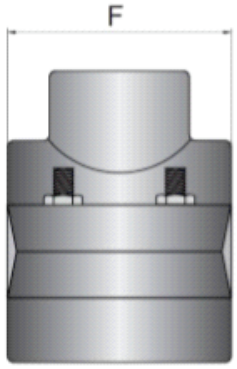

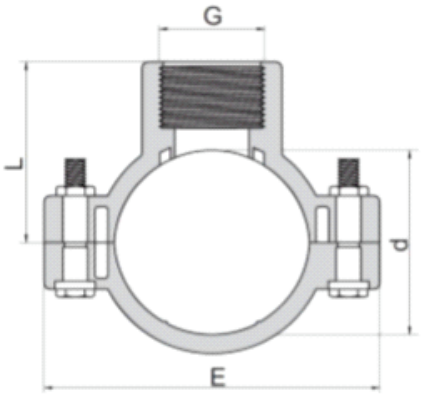

Rosca Fêmea ISO 7
parafusos galvanizados – inox sob consulta

Código	d x G	L	E	F	Nº PARAFUSOS	PARAFUSO	PN	Peso/pc (kg)
CCTS11001210F	110 x ½"	78	15	105	4	M8 X 60	16	
CCTS11003410F	110 ⊂ù "	79	155	105	4	M8 X 60	16	
CCTS11010010F	110 ⊂ 1"	83	155	105	4	M8 X 60	16	
CCTS11011410F	110 x 1¼"	85	155	105	4	M8 X 60	10	
CCTS11011210F	110 x 1½"	85	155	105	4	M8 X 60	10	
CCTS11020010F	110 x 2"	88	155	105	4	M8 X 60	6	
CCTS11021210F	110 x 2½"	94	155	105	4	M8 X 60	6	
CCTS11030010F	110 x 3"	103	155	124	4	M8 X 70	6	
CCTS12503410F	125 ⊂ù "	90	180	130	4	M8 X 70	6	
CCTS12510010F	125 ⊂ 1"	92	180	130	4	M8 X 70	6	
CCTS12511410F	125 x 1¼"	95	180	130	4	M8 X 70	6	
CCTS12511210F	125 x 1½"	95	180	130	4	M8 X 70	6	
CCTS12520010F	125 x 2"	98	180	130	4	M8 X 70	6	
CCTS12521210F	125 x 2½"	111	180	130	4	M8 X 70	6	
CCTS14010010F	140 ⊂ 1"	100	180	130	6	M8 X 70	6	
CCTS14011410F	140 x 1¼"	101	195	130	6	M8 X 70	6	
CCTS14011210F	140 x 1½"	101	195	130	6	M8 X 70	6	
CCTS14020010F	140 x 2"	111	195	130	6	M8 X 70	6	
CCTS14021210F	140 x 1½"	110	195	130	6	M8 X 70	6	
CCTS14030010F	140 x 3"	121	195	130	6	M8 X 70	6	
CCTS16010010F	160 ⊂ 1"	111	219	135	6	M8 X 70	6	
CCTS16011410F	160 x 1¼"	113	219	135	6	M8 X 70	6	
CCTS16011210F	160 x 1½"	113	219	135	6	M8 X 70	6	
CCTS16020010F	160 x 2"	116	219	135	6	M8 X 70	6	
CCTS16021210F	160 x 1½"	122	219	135	6	M8 X 70	6	
CCTS16030010F	160 x 3"	133	219	135	6	M8 X 70	6	

Colar de Tomada Duplo

Material: PP

Pressão de trabalho: vide tabela

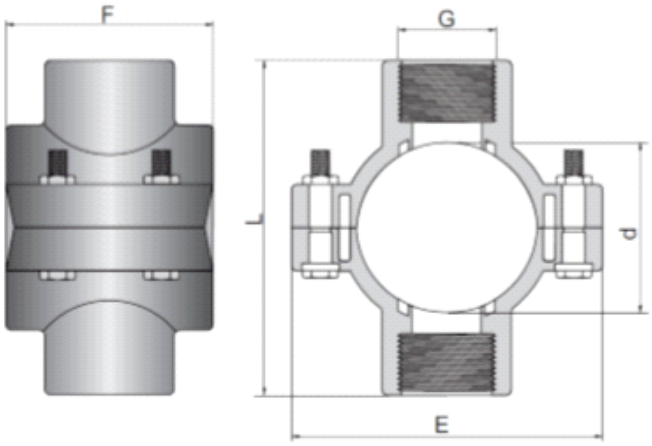

Rosca Fêmea ISO 7

parafusos galvanizados – inox sob consulta

Código	d x G	L	E	F	Nº DE PARAFUSOS	PARAFUSO	PN	Peso/pc (kg)
CCTD02001216F	20 x ½" x ½"	64	62	38	2	M6 X 30	10	
CCTD02501216F	25 x ½" x ½"	66	72	48	2	M6 X 35	10	
CCTD02503416F	25 x ¾" x ¾"	68	72	48	2	M6 X 35	10	
CCTD03201216F	32 x ½" x ½"	78	87	52	2	M8 X 45	10	
CCTD03203416F	32 ´ ¾" x ¾"	80	87	52	2	M8 X 45	10	
CCTD03210016F	32 ´ 1" x 1"	94	88	56	2	M8 X 45	10	
CCTD04001216F	40 x ½" x ½"	84	88	56	2	M8 X 45	10	
CCTD04003416F	40 ´ ¾" x ¾"	84	88	56	2	M8 X 45	10	
CCTD04010016F	40 x 1" x 1"	94	88	56	2	M8 X 45	10	
CCTD05001216F	50 x ½" x ½"	92	95	57	2	M8 X 45	10	
CCTD05003416F	50 ´ ¾" x ¾"	96	95	57	2	M8 X 45	10	
CCTD05010016F	50 ´ 1" x 1"	102	95	57	2	M8 X 45	10	
CCTD06301216F	63 x ½" x ½"	106	108	72	4	M8 X 45	10	
CCTD06303416F	63 ´ ¾" x ¾"	110	108	72	4	M8 X 45	10	
CCTD06310016F	63 ´ 1" x 1"	116	108	72	4	M8 X 45	10	
CCTD06311416F	63 x 1¼" x 1¼"	120	108	72	4	M8 X 45	6	
CCTD06311216F	63 x 1½" x 1½"	120	108	72	4	M8 X 45	6	
CCTD07501210F	75 x ½" x ½"	120	120	90	4	M8 X 60	10	
CCTD07503410F	75 ´ ¾" x ¾"	122	120	90	4	M8 X 60	10	
CCTD07510010F	75 x 1" x 1"	130	120	90	4	M8 X 60	10	
CCTD07511410F	75 x 1¼"x 1¼"	134	120	90	4	M8 X 60	6	
CCTD07511210F	75 x 1½" x 1½"	134	120	90	4	M8 X 60	6	

Colar de Tomada Duplo

Material: PP

Pressão de trabalho: vide tabela

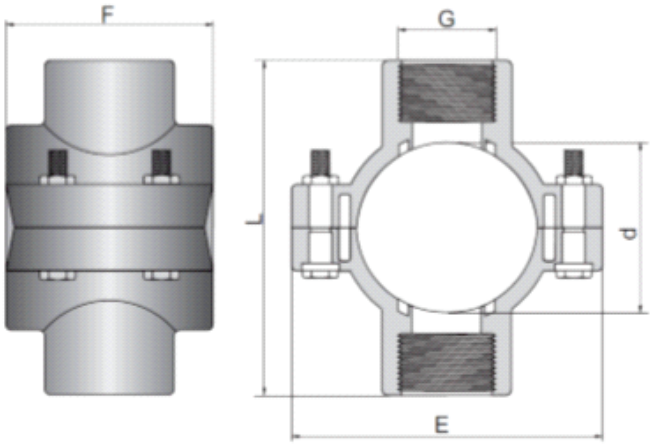

Rosca Fêmea ISO 7

parafusos galvanizados – inox sob consulta

Código	*d x G*	*L*	*E*	*F*	*Nº DE PARAFUSOS*	*PARAFUSO*	*PN*	*Peso/pc (kg)*
CCTD07520010F	75 x 2″ x 2″	140	120	90	4	M8 X 60	6	
CCTD09001210F	90 x ½″ x ½″	136	135	90	4	M8 X 60	10	
CCTD09003410F	90 ´ ¾"x ¾″	138	135	90	4	M8 X 60	10	
CCTD09010010F	90 ´ 1" x 1"	146	135	90	4	M8 X 60	10	
CCTD09011410F	90 x 1¼″ x 1¼″	150	135	90	4	M8 X 60	6	
CCTD09011210F	90 x 1½″ x 1½″	150	135	90	4	M8 X 60	6	
CCTD09020010F	90 ´ 2" x 2″	156	135	90	4	M8 X 60	6	
CCTD11001210F	110 x ½″ x ½″	156	155	105	4	M8 X 60	10	
CCTD11003410F	110 ´ ¾" x ¾″	158	155	105	4	M8 X 60	10	
CCTD11010010F	110 ´ 1" x 1"	166	155	105	4	M8 X 60	10	
CCTD11011410F	110 x 1¼″ x 1¼″	170	155	105	4	M8 X 60	6	
CCTD11011210F	110 x 1½″ x 1½″	170	155	105	4	M8 X 60	6	
CCTD11020010F	110 x 2″ x 2″	176	155	105	4	M8 X 60	6	
CCTD11021210F	110 x 2½″ x 2½″	188	155	105	4	M8 X 60	4	
CCTD11030010F	110 x 3″ x 3″	206	155	124	4	M8 X 70	4	